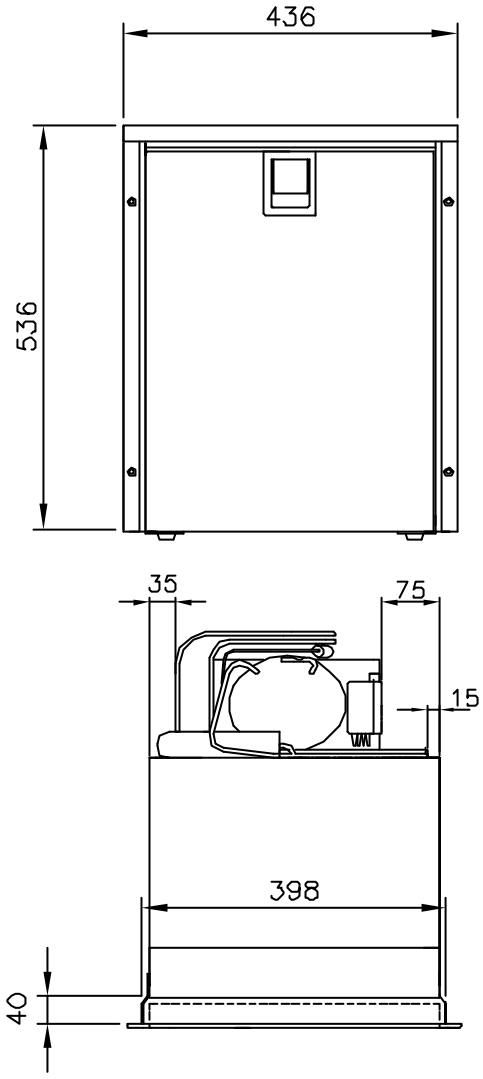

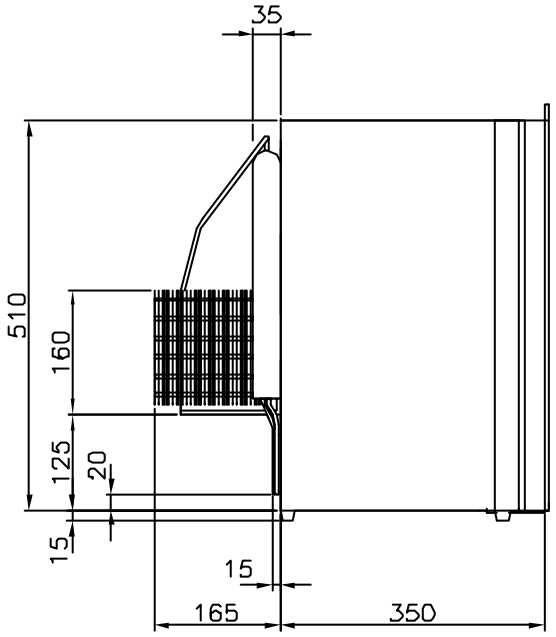

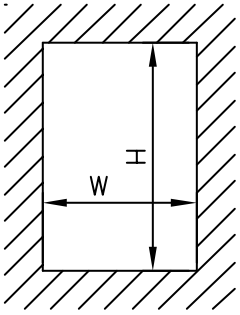

Mounting hole
Cut-out

Dims. mm	WxH
Nominal	410x530
Min	400x525
Max	425x535

Installation dimensions
Flush mounting frame

RevNo	Revision note	Date	Signature	Checked

Item ref	Quantity	Title/Name, designation, material, dimension etc			Article No./Tolerance	
Designed by		Checked by	Approved by – date	Filename	Date 050622/LLG	Scale
Owner		isotherm		Title/Name Isotherm Cruise 42		
				Drawing number CR42 INOX	Edition	Sheet